~TEREX
Utilities

200 Edenway, White House, TN, 37188
Phone: 800-672-4911 Fax: 615-672-0733

Quotation

8/1/2006

Quote Number: 61810017

Tallahassee Electric Operation
2602 Jackson Bluff Rd
Tallahassee FL 32301

Attention: Terry Lowe

Phone: 850-891-5531
Fax: 850-891-5162

Qty.	Description
1	BT3470 Terex Crane * Basic Machine 34,000lbs. (17 tons) Max. lifting capacity-70 ft boom * Maximum Lifting Capacity: 34,000 lb (15422 kg) * Maximum Boom Length: 70 ft (21.3 m) * Number of Boom Sections: 3 * Available Jib Length: 41 ft (12.50 m) * Maximum Tip Height with Jib: 120 ft (36.6 m) * Swing 1 Rotation (see): 55 * Boom up / down (see): 25/16 * Boom Extension / Retract (see): 61/29 * Chassis: 2005 Ford F-750 * Combined Axle Weight:. 33,000 lb (14 969 kg) * Front Axle Weight:. 12.000 lb (5443 kg) * Rear Axle Weight:. 21,000 lb (9 525 kg) * Standard Engine Type: Caterpillar C-7 7.2L 1-6 * Standard Horsepower: 210 hp @ 2,200 rpm * Engine Transmissions: Spicer ES066-7B * Overall Length: 36 ft 6 in (11.13 m) * Overall Width: 8 ft (2.44 m) * Overall Height:. 12 ft 2 in (3.89m) * Weight Crane + Vehicle: (Assumes Std Chassis) 27,250 lb (12 360 kg) * Weight Crane Only: 16,863 lb (7 649 kg
1	696-00005 20 FT. Steel Flat Bed
1	LB 861-60104 Two- Part Load Block (1Sheave) 17.5 ton
1	SPN -00000 9/16" Spin Resistant Cable
1	HSP-OOOOOHot-Shift Power Take Off
1	SFB-00000 Single Front Bumper Stabilizer (required for 360 degree chart)

Grand Total:	$116,331.00
FETTax	$0.00
Grand Total	$116,331.00

Options:

Recommended Chassis Specifications:

Ford F-750 Single Axle Chassis- White- (33,000 GVWR-245hp)

Chassis: 2005 Ford F-750 Combined Axle Weight: 33,000 lb (14 969 kg)

Front Axle Weight: 12.000 lb (5443 kg)

Rear Axle Weight: 21,000 lb (9 525 kg)

Standard Engine Type: Caterpillar C-7 7.2L 1-6 Standard Horsepower: 210 hp @ 2,200 rpm
Engine Transmissions: Spicer ES066-78

Overall Length: 36 ft 6 in (11.13 m) Overall Width: 8 ft (2.44 m) Overall Height: 12 ft 2 in (3.89m)
Weight Crane + Vehicle: (Assumes Std Chassis) 27,250 lb (12360 kg) Weight Crane Only:
16,863 lb (7 649 kg)

**Installation will be determined upon specific Chassis, with weight studies and evaluation.*

Notes:

1. Prices are FOB Shipping Point, delivery prepaid and included.
2. Prices exclude any applicable taxes or license fees.
3. Federal Excise Tax has not been included. A current exemption/resale certificate must be on file and provided with purchase order for tax exempt sale. Federal Excise Tax will be added if certificate is not supplied with order.
4. Terms: Net 10 days with pre-approved credit.
5. Chassis payment is due upon chassis receipt at our facility.
6. Quotation good for 30 days. Contact us for a possible extension if required.
7. Chassis requires clean frame rails, side and top. Relocation of chassis components, to facilitate equipment installation, will be in addition to above quoted price.
8. Terex Telelect is ISO 9001:2000 Certified.

Terex Utilities South – White House

_____

Order Coordinator—Josh Fawley

Account Manager –Charlie Mathews

Accepted By:

_____

PO Number: _____

Date: _____

TEREX LIFTING

TEREX

STINGER™ 3470

Boom Truck Crane

FEATURES

- **34,000 lbs. (15422 kg) maximum lifting capacity**
- **80 ft. (24.4 m) maximum sheave height**
- **120 ft. (36.6 m) maximum sheave height with 40 ft. (12.2 m) jib**
- 70 ft. (21.3 m) fully proportional three-section telescopic "keel" boom
- Exclusive color coded boom and load charts
- Easy-to-install optional 24-40 f1, (7.3-12.2 m) jib, man baskets or work platform increase job capabilities
- Choice of two configurations - behind cab with either 180° or 360° work area and rear mount
- Electronic Load Moment Indicator and anti-two-block device standard
- 2-speed planetary winch has 11,400 lb. (5171 kg) maximum line pull, 150/220 fpm (46/67 mpm) line speed
- Externally located planetary rotation drive for easy accessibility for maintenance
- Dual control stations with direct mechanically controlled hydraulic system
- 67 gal. (340 I) capacity hydraulic tank
- Terex Support Plus product service

simple, available and cost effective™

Machines shown may have optional equipment.

STINGER 3470 lOAD RATINGS

CAUTION: Do not use t.his specification sheet as a load rating chart. The format of data IS not consistent wlth the machine chart and may be sUbject to change.

load Ratings (Pounds) for 360° Full Capacity Work Area with Outriggers Extended and Optional Front Stabilizer

OPERATING RADIUS (FT)	BOOM LENGTH 27 FT LOADED BOOM ANGLE (DEG)	27 FT LOAD RATING (LB)	34 FT LOADED BOOM ANGLE (DEG)	34 FT LOAD RATING (LB)	43 FT LOADED BOOM ANGLE (DEG)	43 FT LOAD RATING (LB)	52 FT LOADED BOOM ANGLE (DEG)	52 FT LOAD RATING (LB)	61 FT LOADED BOOM ANGLE (DEG)	61 FT LOAD RATING (LB)	70 FT LOADED BOOM ANGLE (DEG)	70 FT LOAD RATING (LB)
5	77	34,000										
10	66	21,100	71	17,100	75	16,000	78	15,700				
15	54	15,100	62	14,000	68	12,100	72	11,100	75	10,800	77	9,600
20	39	11,100	51	10,100	61	9,100	66	8,600	71	8,200	73	7,300
25	17	7,900	40	7,700	53	7,100	61	6,900	66	6,600	69	5,900
30			23	6,500	44	6,100	54	5,600	60	5,300	64	4,900
35					33	4,800	47	4,700	54	4,600	60	4,150
40					16	3,500	38	4,100	48	3,900	55	3,550
45							27	3,250	41	3,200	49	3,050
50							9	2,950	33	2,800	44	2,650
55									23	2,500	37	2,350
60											29	1,900
65											19	1,700

NOTE RATINGS ABOVE THE HEAVY LINE ARE BASED ON STRUCTURAL COMPETENCE AND NOT ON MACHINE STABILITY.

Stowed Jib Deductions (Pounds)

450	360	260	230	200	175

JIB CAPACITIES FOR ALL BOOM LENGTHS
VERIFY OPERATIONAL MODE SETTING ON MG585 DISPLAY BEFORE LIFTING WITH JIB

Loaded Boom Angle	35°	40°	45°	50°	55°	60°	65°	70°	75°	80°
Retracted 24 ft. Jib	700	825	1000	1150	1340	1600	1900	2300	3100	4160
Extended 40 ft. Jib	520	580	650	730	810	930	1080	1400	1810	2260

Area of Operation

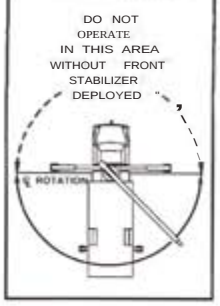

Deductions from Rated Loads for Handling Devices

OVERHAUL BALL:	125 lbs.
1 SHEAVE LOAD BLOCK:	200 lbs.
2 SHEAVE LOAD BLOCK:	230 lbs.
AUXILIARY SHEAVE:	50 lbs.

General Notes

1. The operator must read and understand the Owner's Manual before operating this crane.
2. Positioning or operation of crane beyond areas shown on this chart is not intended or approved except where specified in Owner's Manual.
3. Loaded boom angles at specified boom lengths give only an approximation of the operating radius. The boom angle before loading should be greater to account for deflections. Do not exceed the operating radius for rated loads.
4. Use rating of nexf longer boom for boom lengths not shown. Use rating of next greater radius for load radii not shown.
5. Boom must be fully retracted when jib is erected before lowering below minimum angle. Retracted jib has no lifting capacity below a 50° boom angle.
6. Use rating of next lower boom angle for boom angles not shown on jib load rating chart.
7. Lifting off the main boom point while the swing around jib is erected is not intended or approved.
8. Do not lower boom into this area, as hydraulic pressure will not allow raising the boom without retracting boom first.
9. Crane load ratings on outriggers are based on freely suspended loads with the machine leveled and standing on a firm uniform supporting surface. No atLempt shall be made to move a load horizontally on the ground in any direction.
10. Practical working loads depend on supporting surface. wind and other factors affecting stability such as hazardous surroundings, experience of personnel, and proper handling, must all be taken into account by the operator.
11. The maximum load which may be telescoped is limited by hydraulic pressure, boom angle, and boom lubrication. It is safe to attempt to telescope any load within the limits at the load rating chart.

INFORMATION

1. Deductions must be made from rated loads far stowed jib, optional aftachments, hooks and loadblocks (see deduction chart). Weights ot slings and other load handling devices shall be considered a part of the load.
2. Crane load ratings with outriggers are based on outriggers and stabilizers extended and set with all load removed tram the carrier wheels.
3. Load ratings do not exceed 85% ot tipping load.

DEFINITIONS

1. Operating radius is the horizontal distance from the axis of rotation to the center at the vertical hoist line or load hook with load suspended.
2. Loaded boom angle as shown in the Load Ratings Chart is the included angle between the horizontal and longitudinal axes of the boom base after lifting rated load at rated radius.

Range Diagram (27' – 70' boom)

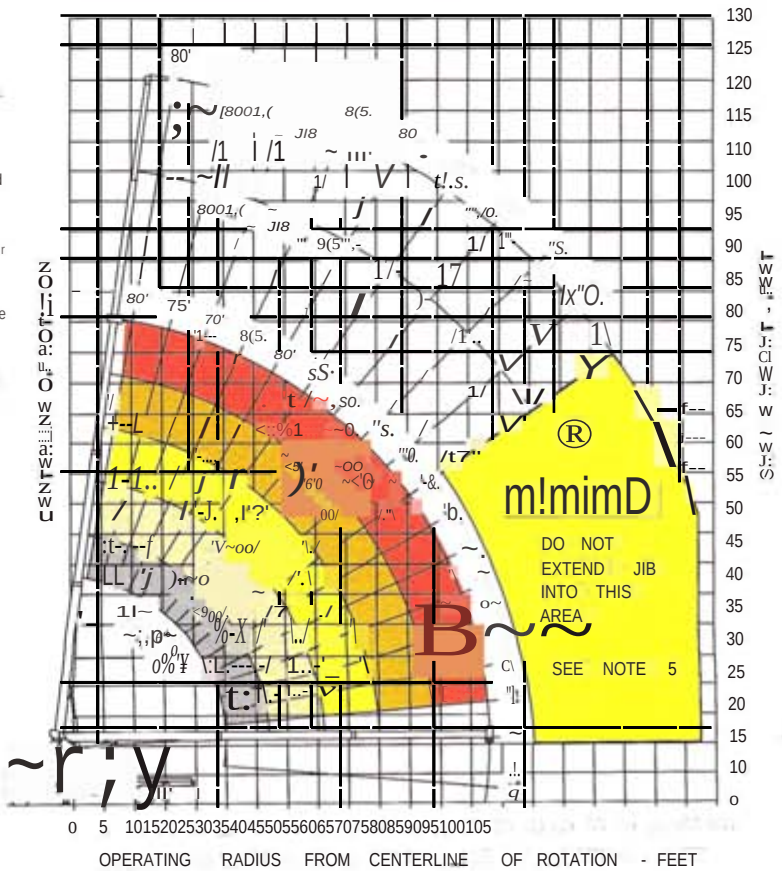

WINCH DATA

		1 Part Line	2 Part Line	3 Part Line	4 Part Line
Winch	Cable Supplied	Lift and Speed	Lift and Speed	Lift and Speed	Lift and Speed
Standard Stationary Winch	9/16" Diam. IWRC XXIP	9,600 lb. 94 fpm'	19,200 lb. 47 fpm'	28,800 lb. 32 fpm'	34,000 lb. 24 fpm'
	9/16" Diam. Rotation Resistant	6,720 lb. 94 fpm'	13,440 lb. 47 fpm'	20,160 lb. 32 fpm'	26,880 lb. 24 fpm'

*First layer speed. For fourth layer speed, multiply *value by 1.33, for burst speed, multiply by 1.7.

Block Type	Rating
Overhaul Ball	65 ton (5.9 mt)
1 Sheave Block	17 ton (15.4 mt)

A CAUTION

Overload and anti-two-block systems must be in good operating condition before operating crane. Refer to Owners Manual.

Keep at least 3 wraps of loadline on drum at all times.

Use only 9/16" diameter cable with 33,600 lb. breaking strength on this machine.

MOUNTING CONFIGURATIONS

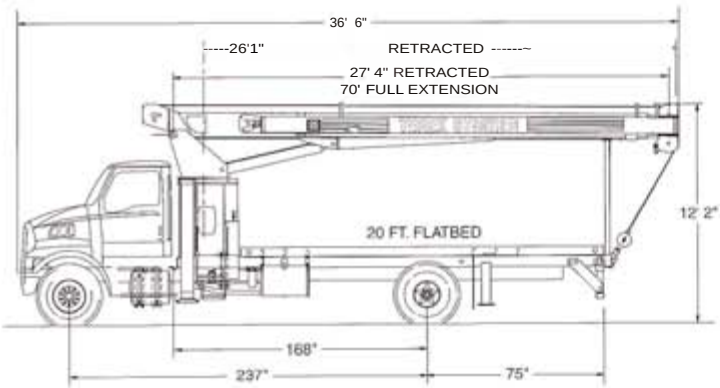

3470 Behind Cab (BT) Mounting Configuration

Gross Vehicle Weight Rating	33,000 lbs. (14969 kg)
Front Axle Weight Rating	12,000 lbs. (5443 kg)
Rear Axle Weight Rating	21,000 lbs. (9526 kg)
Wheelbase	237 in. (6020 mm)
Cab to Axle	168 in. (4267 mm)
Afterframe	75 in. (1905 mm)
Transmission (Neutral lock-up required for automatic transmission)	Heavy-Duty
Electrical System	Heavy-Duty
Cooling System	Heavy-Duty
Frame Section Modulus	15.9 in' (261 em')
RBM Per Frame Rail	1,400,000 in. lb. (16 130 m. kg)

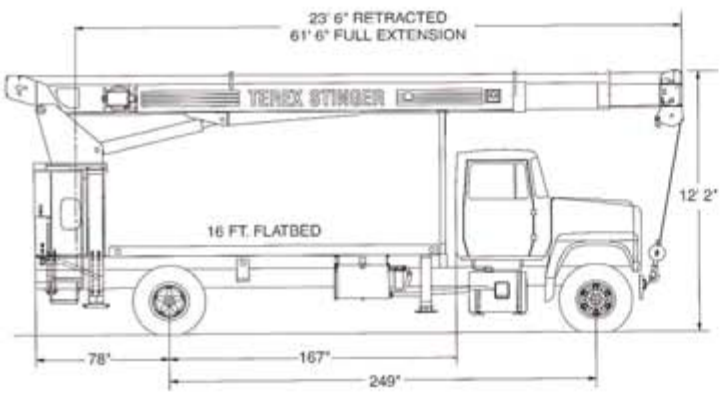

3470 Rear Mount (RM) Mounting Configuration**

Gross Vehicle Weight Rating	33,000 lbs. (14969 kg)
Front Axle Weight Rating	12,000 lbs. (5443 kg)
Rear Axle Weight Rating	21,000 lbs. (9526 kg)
Wheelbase	249 in. (6325 mm)
Cab to Axle	167 in. (4242 mm)
Afterframe	78 in. (1981 mm)
Transmission (Neutral lock-up required for automatic transmission)	Heavy-Duty
Electrical System	Heavy-Duty
Cooling System	Heavy-Duty
Frame Section Modulus	20.0 in' (328 em')
RBM Per Frame Rail	1,800,000 in. lb. (20740 m. kg)

**May require counterweight or tandem rear axle. Consult factory.

Note: Some standard features for the optional mounting configurations will vary. Consult your Terex Cranes dealer or factory for chassis and mounting requirements.

TEREX STINGER 3470

Boom Truck Crane

SPECIFICATIONS

Boom

70 ft. (21.3 m) three section full power mechanically synchronized boom. Patented keel boom design utilizes a keel-shaped baseplate combined with a deep, four plate boom section to optimize strength / rigidity-to-weight ratio. Exclusive, patented color-coded boom and load charts allow the operator to easily and Quickly determine boom extension, boom angle and load capacity. Maximum sheave height with three section 70 ft. (21.3 m) boom is 80 ft. (24.4 m). Maximum sheave height with optional two-stage 40 ft. (12.2 m) jib is 120 ft. (36.6 m).

Winch

Hydraulic winch with gear motor and planetary reduction gearing provides 2-speed operation. First layer rope pull is 11,400 lbs. (5171 kg). Wire rope size is 9/16" (14 mm) with 33,600 lbs. (15241 kg) breaking strength.

Operating Speeds

Main frame / turret assembly planetary rotation provides 180° rotation (370° with optional front bumper outrigger). Swing rotation is 40 seconds. Boom up/down is 22/22 seconds and boom extend/retract is 50/22 seconds.

Hydraulics

Three section pump allows the operator to perform simultaneous crane operations (winch, boom and swing). Capacities are 36, 20 and 11 gpm (136.3, 75.7 and 41.6 lpm). Combined system capacity is 67 gpm (253.6 lpm).

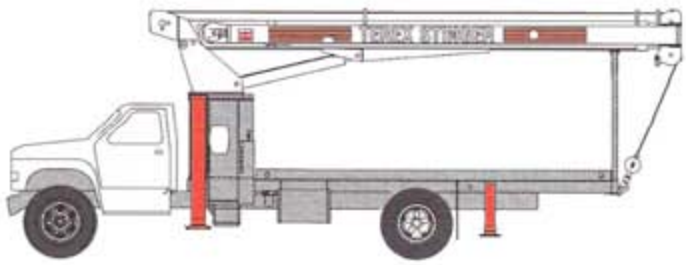

Controls

Fully proportional, excellent metering characteristics for precise boom movements. Independent outrigger controls allows the crane to be stable and level in rigorous working conditions. Load Moment Indicating System has audio alarm and functional shut down when operator encounters an overload situation.

Outriggers

Wide-stance link-type main outriggers have a 18 ft. 6 in. (5.6 m) pin-to-pin spread when fully extended. A-Frame rear outriggers have 10ft. 1 in. (3 m) tip-to-tip span.

Subframe

Single fabricated, closed-box style subframe yields greater strength and rigidity. Wheel base for standard truck crane mounting configuration is 237 in. (6 m).

OPTIONS AND ACCESSORIES

Terex Stinger offers a wide range of options and accessories to customize your truck crane to your exact needs.

These include:

- Single and two-stage jibs
- Multi-part load blocks
- Auxiliary winch
- Spin-resistant load line
- Wood, steel or extra heavy duty steel flatbeds
- Radio remote controls
- One-man or two-man baskets
- Self-leveling work platform with radio remote
- Winch drum tensioner
- Continuous rotation
- Oil cooler
- Rear bumper
- Single front bumper outrigger (required for 370° or continuous rotation)
- Hydraulic hose reel
- Hydraulic auxiliary tool circuit

For more information, product demonstration, or details on purchase, lease and rental plans, please contact your local Terex Cranes dealer

We reserve the right to amend these specifications at any time without notice. The only warranty applicable is our standard written warranty applicable to the particular product and sale. We make no other warranty, expressed or implied.

~TEREX CRANES

550 Old Highway 56
Olathe, KS 66061-4640 USA
(913) 782-1200' FAX (913) 782-1625
E-mail: inquire@lerexlilting.com

~.terexlift.c~

©Terex Cranes, Inc. 2001

Litho in U.S.A.

10J1201MSG