~TEREX
Utilities
200 Edenway, White House, TN, 37188
Phone: 800-672-4911 Fax: 615-672-0733

Quotation

7/28/2006

Quote Number: 61810007

Tallahassee Electric Operation
2602 Jackson Bluff Rd
Tallahassee FL 32301

Attention: Terry Lowe

Phone: 850-891-5531
Fax: 850-891-5162

Qty.	Description
	DERRICK
1	One (1) new Terex-Utilities Telelect L4045 model hydraulic rotating digger derrick with a TM winch.

Design Criteria:
* Terex Utilities aerial devices are designed in accordance with current industry and engineering standards applicable and accepted for structural and hydraulic design.

Elevation:
* From +80 degrees above horizontal to -20 degrees below horizontal..

Pedestal And Turntable:
* Square constructed pedestal has access holes for maintenance of hydraulic plumbing. The turntable is fabricated from high-strength steel utilizing thick side plates and a single-piece thick bottom plate. The bearing mounting surface is machined after welding to maintain a flat bearing mounting surface. The boom to mast connection and lift cylinder to boom are equipped with self-aligning steel ball bushings.

Lift Cylinder:
* Double-acting cylinder with chrome plated rods and integral holding valves.

Steel Main Boom Section:
* The main boom section is a fabricated box utilizing high-strength steel plates.

Steel Second Boom Section:
* Fabricated box constructed of high strength steel. Powered by a double acting hydraulic cylinder equipped with integral holding valves on both extend and retract ports.

Fiberglass Hydraulic Third Boom Section:
* Capable of lifting the hydraulic capacity of the derrick in all positions.
* Certified for rated line voltage up to and including 46 KV AC.
* Tapered non-metallic rollers mounted at the end of the second section support the fiberglass boom under load minimizing scratches and abrasions. The sides of the fiberglass boom are supported and guided by non-metallic rollers to prevent tracking.

~ty. **Description**

Boom Interlock:
* To operate the boom the outriggers must be extended.

Continuous & Unrestricted Rotation:
* Provided by worm gear drive through reversible hydraulic motor. Worm gear drive powers a special design long life hardened "shear ball" ball bearing rotation gear.

Hydraulic System:
* Tandem vane type high efficiency 3000 psi rated hydraulic pump providing 16 gallons per minute for boom functions and 40 gallons per minute combined flow for digger and winch (at 2000 RPM and 2600 psi).
* 50 hydraulic oil reservoir includes 10 micron replaceable cartridge type return line filter mounted in reservoir with bypass valve incorporated in filter to prevent restricted flow.
* A 100 mesh in screen in filter cap. A 40 mesh screen included in tank outlet.. Shut off valve.
* Glycerin filled pressure gauge to monitor circuit pressures.
* Relief valves to protect the derrick circuits and digger-winch circuits.
* Hydraulic hoses are equipped with permanent type hose fittings.

Miscellaneous:
* A load chart stating actual lifting capacity considering all final options, chassis, body, outriggers, and other fixed equipment with final readings based on completed unit stability is included.
* A boom-angle indicator and decal are mounted on each side of the main boom.
* The entire unit is painted with rust inhibiting primer.
* Two complete manuals providing operational and maintenance procedures, and a replacement parts listing.
* Warning decals provided with unit.

PG Winch Including Transferable Pole Buddy Assembly:
* 15,000 lb. bare drum capacity worm gear winch equipped with adjustable brake mounted at end of second section boom. Telescopic trombone type tubes to provide oil to the winch motor.. Equipped with flanged pole buddy transferrable from 2nd section to 3rd section.

Bare Boom Lift Capacities:

* Boom Angle:	Boom Retracted	2nd Boom Extended	2nd and 3rd Extended
* Maximum Elevation	19020	13420	11400
* 10Ft.. Radius	8990	8220	7510
* 45 Degree Boom Angle	7570	4620	3420
* 0 Degree Boom Angle	4750	2590	1790

Sheave Height:.
* With 2nd section extended, 35.7 ft. at maximum elevation.
* With 3rd section extended, 44.8 ft. at maximum elevation.
* Dimensions are based on a 40" chassis frame height..

Load Radius:
* 25.6 ft. from *CIL* of rotation, at 0 degree, 2nd section extended.
* 34.8 ft. from *CIL* of rotation, at 0 degree, 3rd section extended.

~ty.	Description
1	Command Post With "EXCLUSIVE SINGLE STICK T" Control: * Control allows one hand to operate three functions: rotation, boom elevation, and section boom extension. * Third section boom extension and other functions have individual controls. * Glycerin filled pressure gauge is provided to monitor system pressure. * Permanent type control decals are provided. * Adjustable cushioned operator seat is provided as standard and includes side rails. * Hydraulic foot throttle. * Command post access step and hand rail installed.
1	Remote Sensor Bracket:. * Bracket to be used with the Williams remote sensor. Installed to supply sensor to work with truck engine.
1	Williams Control
1	Boom rest for digger derrick.
1	PUMP
1	PEDESTAL
~.	12,000 ft-lb Two Speed Digger With Hydraulic Shift (ESK 76BA): * Planetary gear drive powered by reversible hydraulic motor: * 60" long x 2-5/8" hex auger shaft with auger adjustment holes. * Digger hanger is box section and is equipped with a transfer protection system, auger storage bracket with self latching auger catch, hydraulic auger release, and auger rOil-up cable. * The auger bracket stores up to a 24" diameter auger, in the standard position. * Telescopic trombone tube is provided to shift the two-speed digger hydraulically. * Digger storage protection system to protect the auger storage cable from damage caused by over-winding. Oil from the digger system is returned to tank before the cable is over-stressed.
1	Tilt Pole Plummer For Transferable Pole Buddy: * Unique circular design arms handle poles up to 23 in. diameter with the tips touching. * Hydraulic cylinders equipped with holding valves operate the tilt and open/close on pole plummer arms. * Pole plummer hoses are contained in a chain type carrier, installed on the side of the boom. * Transfers from the end of the second section to the end of the third section and vice versa. * The pole plummer is installed on the transferable pole buddy flange assembly.
1	Tilt Pole Plummer Interlock For Transferable Pole Plummer: * Protects both the tilt pole plummer and the boom from accidental damage caused by extending the third section boom while the tilt pole plummer is on the second section and tilted downward. Includes actuating plunger and two poppet valves.
1	Hydraulic Overload Protection For Rotation, 2nd Section, 3rd Section, Winch, Digger Dig & Boom Down: * Helps prevent damage to derrick when overloads occur. These systems leave operational those functions necessary to eliminate the overload condition until it is relieved. * The system is fully automatic relative to the operation and re-set functions.

Qtty.	Description
1	Power take *off, 10-bolt.*, with indicator light for Allison **MD** *automatic* transmission.
1	Electric collector ring 2-conductor.
1	Full length subframe for 120" CA chassis.
1	Tie down kit.
1	Extra Heavy Duty A-frame Outriggers: * Hydraulic double acting outriggers including integral holding valves. * 146.7" spread pin to pin and 157.5" to outside of pads at 9.6" penetration and 40" frame height. * 13 " x 12 " swivel type stabilizer pads.
1	Heavy Duty A-Frame Outriggers: * Hydraulic double acting outriggers including integral holding valves. * 144.4 " spread pin to pin and 155.9 " to outside of pads at 8 " penetration and 42 " frame height. * 13 " x 12 " swivel type stabilizer pads.
1	Controls For 2-Sets Of Outriggers: * Recessed at rear of truck each side for ease of view for outrigger placement. * Includes switches and alarm for outrigger in motion alarm.

Qtty.	Description
	UTILITY BODY
1	LLB168 Utility Line Body: A. Dimensions -168" overall length -94" outside width -58" bed width -28" floor to top of body -18" compartment depth -46" compartment height -24" horizontal compartment height B. Compartmentation - Street Side -First Vertical (30") - 5 material hooks (1-3-1) -Second Vertical (30") - 2 adjustable shelves with 5 adjustable dividers each -Third Vertical (30") - 2 adjustable shelves with 5 adjustable dividers each -Horizontal (54") - 8 adjustable dividers in compartment bottom -Rear Vertical (24") - 5 material hooks (1-3-1) C. Compartmentation - Curb Side -First Vertical (30") - 5 material hooks (1-3-1) -Second Vertical (30") - access steps to cargo area -Third Vertical (30") - 2 adjustable shelves with 5 adjustable dividers each -Horizontal (54") - 1 adjustable shelf with 8 adjustable dividers -Rear Vertical (24") - 5 material hooks (1-3-1) D. Features -Full length shelf in top of street side compartments with rear drop door -Wheel chock storage (2) each side in wheel wells -16-gauge A60 double-sided galvanneal coated steel body exterior -18/16-gauge A60 double-sided galvanneal coated steel door panels -12-gauge treadplate floor -12-gauge treadplate compartment tops -Rotary door latches and full-length stainless steel rod door hinge -Chain stops on doors and includes automotive bulb-type door seals
1	Bridge frame and floor and installation of the subframe and outriggers.
1	Tail shelf 30" long with 12-gauge treadplate top and full side skirts.
2	Grab handle for stair type side access steps.
4	Pool type pipe grab rail for tailshelf or rear of flatbed.
3	Cable type gripstrut stirrup step.
1	Access steps mounted on command post.
1	Access steps to command post or platform.
	Integral wiring and switches in International chassis for electrical accessories (Diamond Logic).
1	Set chassis parameters.

Qty.	Description
1	One pair of mud flaps.
1	DOT Inspection.
1	Peterson LED 7-lamp DOT Lighting Package: * Complies with FMVSS 108 * Includes required lights, junction box, wiring harness and mounting light bar.
1	Amerex 5-lb ABC fire extinguisher with bracket.
1	James King triangle reflector kit.
1	Orion flare kit with holder.
1	Paint line body one color.
1	Paint derrick one color.
1	Paint aerial device one color.

Grand Total:	$76,113.00
FET Tax	$0.00
Grand Total	$76,113.00

Options:

	Add
Engine stop / start at pedestal.	$202.00
Operator light at controls.	**$187.00**
Texoma 9 TXD104-52 auger 9" with steel blade teeth, 5/16" flighting and 2-5/8" hex bushing.	**$742.00 ea.**
Texoma 18 TXD104-48 auger 18" with steel blade teeth, 5/16" flighting and 2-5/8" hex bushing.	$1,007.00 ea.
Texoma 24 TXD104-48 auger 24" with steel blade teeth, 5/16" flighting and 2-5/8" hex bushing.	$1,189.00 ea.
Nylon roll-up in lieu of steel cable:	**$44.00**
Boom Stow Protection For Controls Above Rotation: * Protects against damage from excessive down pressure by cutting off oil supply to the derrick. * Includes a 2 channel electric collector ring.	$806.00
Jntrols For 2-Sets Of Outriggers And Auxiliary Tool Outlets Below Rotation: * Recessed at rear of truck each side for ease of view for outrigger placement. * Includes switches and alarm for outrigger in motion alarm.	$267.00

	Add
Remote engine stop / start control from rear of vehicle.	$487.00
Hannay spring loaded hydraulic hose reel with 4-way roller assembly. * Curb side rear * Dual Hose Assembly For Hose Reel: * 35' of 1/2" ID hose * Parker HTMA male and female flush faced couplers and dust covers. * Installed on hose reel with ball stop.	**$1,016.00**
Bracket for storing grounding cable.	$166.00
Ground Cable Black 1/0: * 50' of copper cable, three grounding lugs and grounding clamp. * Three point grounding system for grounding vehicle during work operations. * Cable must be fully removed before use.	$142.00
Ground Cable Black 2/0: * 50' of copper cable, three grounding lugs and grounding clamp. * Three point grounding system for grounding vehicle during work operations. * Cable must be fully removed before use.	**$192.00**
Hannay spring rewind grounding reel.	$961.00
Aanual Ground Reel * Terex Utilities Part # FA20001	$633.00
Braden PD18C-11DB FEB Hydraulic Planetary Front Mounted Bumper Winch Including: * 20,OOO-lbrated capacity. * Extended shaft to curb side for take-up reel. * Four way roller assembly. * 200' of 1/2" 6x19 wire rope with eye. * Upper and lower winch line guards. * Safety tread plate installed around winch. * Winch valve, air actuator, miscellaneous hose and fittings. * Painted White to Match Chassis	**$6,188.00**
Braden AHGU5 Hydraulic Two Speed Low Mount Rear Mounted Winch IncIUding: * 20,OOO-lbrated capacity. * Extended shaft to curb side for take-up reel. * Four way roller assembly. * 200' of 1/2" 6x19 wire rope with eye. * Upper and lower winch line guards. * Safety tread plate installed around winch. * Winch valve, air actuator, miscellaneous hose and fittings.	**$5,855.00**
Braden PCD24B Hydraulic Capstan Drive: ~4,000-LB rating. Spring applied hydraulically released parking brake.	**$3,835.00**

	Add
Collapsible Take-up Reel: * 4,OOO-lbmaximum pulling force. * 20" diameter, 28" overall. * Bayonet style socket fits 2-7/16" shaft.	$722.00 ea.
CR reel storage bracket.	**$330.00**
Winch control installed in chassis cab.	$395.00
Winch control installed at front bumper	$395.00
Flag Holders * Terex Utilities Part # FOP10067	$57.00
Bumper Markers * Terex Utilities Part # BA30066	**$69.00**
Master door rod lock system.	**$206.00**
Flatbed, 12-ft heavy duty with 12-gauge tread plate deck. T40 Transverse Saddle Compartment: 40" wide x 48" high x 94" across with 24" deep compartments. ~"A. Compartmentation - Curb Side -1 fixed thru shelf in forward portion above material drawers -1 pull out drawer in forward portion, 4" D x 42" L, adjustable dividers on 6" centers -2 pull out drawers in forward portion, 6" D x 42" L, adjustable dividers on 6" centers -Pull out tool board in rear potion B. Compartmentation - Street Side -4 fixed material hooks (2-0-2) C. Features -Tie rail on three sides. -Double overlapping doors equipped with door chains. -16-gauge body materials, 12-gauge compartment top. -Rod and socket door hinge. -Slam action paddle type door latches. -Chain stop on doors. -Automotive bulb type weather stripping. - Wheel Chock Pockets - Bridge Frame Sub frame & outriggers	(Deduct) $-880.00
Reading Body in lieu of Terex Utilities Standard Body * 168 " Line Body	**$ 2,353.00**
Compartment With Side Drop Down Door: * 12-gauge tread plate top. * 18'W x 18"H x 36"L. ~Equjpped with rotary paddle latch and chain stops.	**$687.00 ea.**

	Add
Compartment With Side Drop Down Door: * 12-gauge tread plate top. * 18'W x 18"H x 60"L. * Equipped with rotary paddle latch and chain stops.	**$761.00** ea.
Compartment With Side And End Drop Down Doors: * 12-gauge tread plate top. * 18'W x 18"H x 36"L. * Equipped with rotary paddle latch and chain stops.	**$933.00 ea.**
Compartment With Side And End Drop Down Doors: * 12-gauge tread plate top. * *18'W* x 18"H x 60"L. * Equipped with rotary paddle latch and chain stops.	**$981.00 ea.**
Compartment With Two Side Drop Down Doors: * 12-gauge tread plate top. * *18'W* x 18"H x 60"L. * Equipped with rotary paddle latch and chain stops.	**$996.00 ea.**
Compartment With Two Side Drop Down Doors: * 12-gauge tread plate top. ~ *18'W* x 18"H x 120"L. Equipped with rotary paddle latch and chain stops.	**$1,128.00 ea.**
Compartment With Two Side Drop Down Doors And One End Drop Down Door: * 12-gauge tread plate top. * *18'W* x 18"H x 60"L. * Equipped with rotary paddle latch and chain stops.	**$1,199.00 ea.**
Compartment With Two Side Drop Down Doors And One End Drop Down Door: * 12-gauge tread plate top. * *18'W* x 18"H x 120"L. * Equipped with rotary paddle latch and chain stops.	**$1,299.00 ea.**
Compartment With Top Opening Lid: * 12-gauge tread plate top. * *18'W* x 18"H x 36"L. * Equipped with cam-action hasp and chain stops.	**$571.00 ea.**
Compartment With Top Opening Lid: * 12-gauge tread plate top. * *18'W* x 18"H x 60"L. * Equipped with cam-action hasp and chain stops.	**$628.00 ea.**
Compartment With Top Opening Lid: ~ 12-gauge tread plate top. *18'W* x 18"H x 120"L. * Equipped with cam-action hasp and chain stops.	**$801.00 ea.**

	Add
Compartment With Two Split Top Opening Lids: * 12-gauge tread plate top. * 18"W x 18"H x 120"L. * Equipped with cam-action hasp and chain stops.	$1,021.00 ea.
Compartment With Two Overlapping Top Opening Lids: * 12-gauge tread plate top. * 18'W x 18"H x 120"L. * Equipped with cam-action hasp and chain stops.	**$1,021.00 ea.**
Compartment With Top Opening Lid And One End Drop Down Door: * 12-gauge tread plate top, * 18'W x 18"H x 60"L. * Equipped with rotary paddle latch and cam-action hasp and chain stops.	**$867.00 ea.**
Compartment With Top Opening Lid And One End Drop Down Door: * 12-gauge tread plate top. * 18'W x 18"H x 120"L. * Equipped with rotary paddle latch and cam-action hasp and chain stops.	**$981.00 ea.**
Compartment With End Drop Down Door: * 12-gauge tread plate top. * 18'W x 18"H x 60"L. Equipped with rotary paddle latch and chain stops.	**$736.00 ea.**
Compartment With End Drop Down Door: * 12-gauge tread plate top. * 18'W x 18"H x 120"L. * Equipped with rotary paddle latch and chain stops.	**$851.00 ea.**
Compartment With Side Vertical Door: * 12-gauge tread plate top. * 24" W X 18"0 x 46" H. * Equipped with rotary paddle latch and chain stops.	**$762.00 ea.**
Laminated wood outrigger pad 24" x 24" x 2-1/4" with rope handle.	**$143.00 ea.**
Outrigger pad storage brackets. * Under each body side front and rear axle.	**$299.00 ea.**
Dica 18" x 18" poly outrigger pads.	**$91.00 ea.**
Rubber wheel chocks with eye bolt.	**$40.00 ea.**
Hour meter for power take off engagement time or engine hours, specify.	**$86.00**
~evel indicator, pointer type. Kear of bin both sides.	**$36.00**

	Add
Horizontal enclosed ladder box with rubber covered rear roller: * 16-gauge construction.	$470.00
Possum belly door at rear.	$178.00
Ice Chest Bracket	$206.00
Golight 7900 spotlight with wireless remote.	**$474.00 ea.**
Whelen L32L Super LED Strobe Lights	$423.00 ea.
Whelen 500 Series TIR Super lED * Part # 50C03ZAR	$312.00 ea.
Unity AG-R-H halogen 6" spotlight with mounting bracket.	**$221.00 ea.**
VISTA strip compartment light. * Compartment lighting for all (10) Body Compartments	**$714.00 ea.**
Go-light * Terex Utilities Part # LA75003	**$347.00 ea.**
~~helen Far Strobe lights Whelen Part # 50A-00-Far Strobe lights	**$158.00 ea.**
Stanley Crimper * Terex Utilities Part # STNCT10016N	**$1,717.00**
Stanley Pole Tamp * Terex Utilities Part # STNTA54103	**$1,012.00**
Mule Tape Driver * M 15 * Includes Torque Wrench, Reel, & 1,500 ft of Mule Tape	**$4,397.00**
Redi-Line DA12L electric generator, 1600W, 120VAC, 15A.	$1,328.00
Dimensions Inverter * Terex Utilities part # FA26002	$1,146.00
12 Volt Power Outlet	$112.00
1" x 100' Samson, 2-IN-1 Stable Braid rope.	$260.00
Gunnebo Johnson 7JH swivel hook.	**$359.00**
Nylite spool and shield for winch rope.	$94.00
Miller #61 down haul weight.	$350.00

	Add
Shackle 1".	$67.00
Two part line attachment.	$30.00
Crosby Laughlin * Part # 8.5.5.1	$953.00
Paint body floor with non-skid paint.. * Black	$130.00
Paint Boom Safety Yellow in lieu of Standard White	$771.00
Reflective Tape * Terex Utilities Part # LA20035	$108.00
Midland 7-prong trailer socket	$125.00
Buyer Products tow hooks, one pair.	$165.00
Tekonsha Voyager electric brake control.	$254.00
T-125A, 15 ton pintle hook: *Safety chain eyes. Chassis frame reinforcements.	$586.00
One pair of rubber dock bumpers at rear.	$115.00

..oles:

1. Prices are FOB Shipping *Point,* delivery prepaid and included.
2. Prices exclude any applicable taxes or license fees.
3. Federal Excise Tax has not been included. A current exemption/resale certificate must be on file and provided with purchase order for tax exempt sale. Federal Excise Tax will be added if certificate is not supplied with order..
4. Terms: Net 10 days with pre-approved credit..
5. Quotation good for 30 days. Contact us for a possible extension if required.
6. Chassis requires clean frame rails, side and top. Relocation of chassis components, to facilitate equipment installation, will be in addition to above quoted price.
7. Terex Telelect is ISO 9001 :2000 Certified.

Terex Utilities South – White House

_____

Order Coordinator—Josh Fawley

Account Manager –Charlie Mathews

Accepted By:

_____

PO Number: _____

Date: _____

~TEREX
Utilities

Digger Derrick | TEREXTelelect L4000 Series

Digger Derrick L4000

STANDARD FEATURES AND EQUIPMENT

- Single Lift Cylinder
- Box Fabricated Booms
- Full Pressure Hydraulic Controls
- Self-Aligned Swivel Ball Bushings
- C~stom Mf),de Zoned Load Chart
- Continuous Unrestricted Rotation
- 50 Gallon Hydraulic Oir Reservoir
- Steel Hydraulic Second Section
- Full Capacity Fiberglass Hydraulic Third Section
- Meets or Exceeds ANSI A10.31
- 100° of Boom Travel (+80° to -20°)
- Boom Interlock

OPTIONAL EQUIPMENT

- Tilt Pole Plummer
- Transferable Pole Buddy
- Diggers/Augers
- Various Types of Outriggers
- Hydraulic Overload Protection
- Platforms
- Top Controls
- Jibs
- Pole Puller

WORKING ENVELOPE

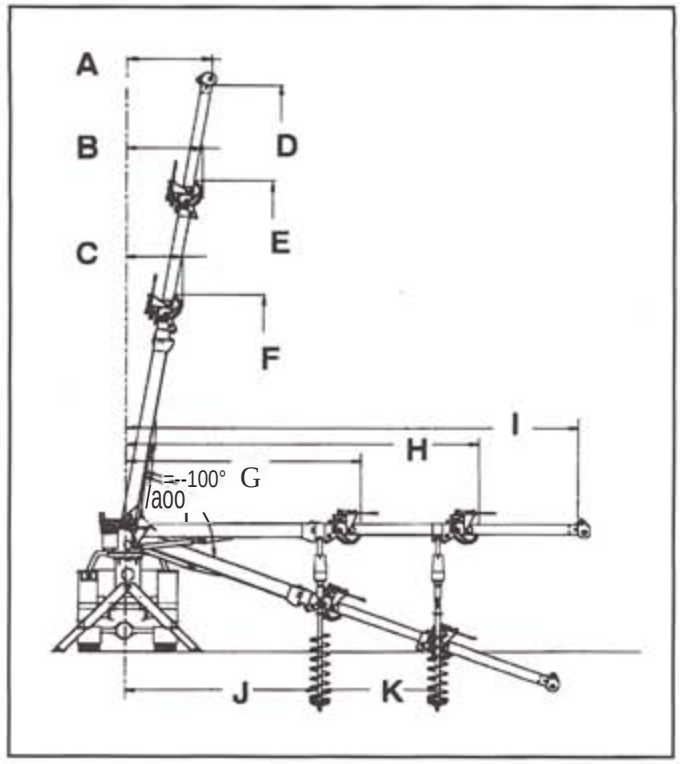

CAPACITIES & DIMENSIONAL DATA

Model	Maximum Capacity	Capacity @ 10 ft. Radius	Load Radius A	Load Radius B	Load Radius C	Sheave Height D	Sheave Height E	Sheave Height F	Horizontal Reach G	Horizontal Reach H	Horizontal Reach I	Digging Radius J	Digging Radius K
L4040													
TM Winch	26,5901b (12,061 kg)	10,1101b (4,586 kg)	5.6 It (1,7 m)	4.2 It (1,7 m)	2.8 It (0.9 m)	41.5 It (12.6 m)	33.6 It (10.2 m)	25.8 It (7.9 m)	15.5 It (4.7 m)	23.5 It (7.2 m)	31,5 It (9.6 m)	13.0 It (4.0 m)	8.0 It (2,4 m)
PG Winch	20,9601b (9,507 kg)	9,4801b (4,300 kg)	5,4 It (1,6 m)	4.7 It (1,4 m)	3.3 ft (1.0 m)	40.9 It (12.5 m)	32.7 It (10.0 m)	24.8 It (7,6 m)	14.6 It (4.5 m)	22.6 It (6.9 m)	30.8 It (9,4 m)	13.0 It (4.0 m)	8.0 It (2.4 m)
L4042													
TM Winch	25,0701b (11,372 kg)	10,0001b (4,536 kg)	5.8 It (1.8 m)	4.4 ft (1,3 m)	3.0 It (0.9 m)	42.5 It (13.0 m)	34.6 It (10.5 m)	26.8 It (8.2 m)	16.5 It (5.0 m)	24.5 It (75 m)	32.5 It (9.9 m)	14.0 It (4.3 m)	8.0 It (2.4 m)
PG Winch	19,9601b (9,054 kg)	9,2501b (4,196 kg)	5.6 ft (1,7 m)	4.8 ft (1.5 m)	3,4 ft (1.0 m)	41.9 It (12.8 m)	33.7 It (10.3 m)	25.8 ft (7.9 m)	15.6 ft (4.8 m)	23.6 ft (7,2 m)	31.8 ft (9,7 m)	14.0 It (4.3 m)	8.0 ft (2,4 m)
L4045													
TM Winch	23,6701b (10,737 kg)	9,8201b (4,454 kg)	6.3 It (1,9 m)	4.7 It (1.4 m)	3.1 It (0.9 m)	45.5 It (13.9 m)	36.6 It (11,2 m)	27.7 It (8.4 m)	17,5 It (5.3 m)	26.5 It (8.1 m)	35.5 ft (10.8 m)	15.0 It (4.6 m)	9.0 It (2,7 m)
PG Winch	19,0201b (8,627 kg)	8,9901b (4,078 kg)	6.1 It (1.9 m)	5.2 It (1,6 m)	3.6 It (1.1 m)	44.8 It (13.7 m)	35.7 It (10.9 m)	25.8 It (8.2 m)	16.6 ft (5.1 m)	25.6 It (7,8 m)	34.8 It (10.6 m)	15.0 ft (4.6 m)	9.0 It (2,7 m)

Photographs and illustrations represented in this literature are for informational purposes only and may depict optional or additional equipment not offered as standard. Always refer to the appropriate operator's manual for safe and proper operation of TEREX Telelect equipment. TEREX Telelect reserves the right to make design changes are necessary_

For More Information:

!WJTEREX
Utilities

600 Oakwood Road
PO BOX 1150
Watertown, SO 57201
USA

Phone: (605) 882-4000
Facsimile: (605) 882-1842

www.terexutilities.com
E-mail: sales@terexutilities.com